EDM12864-29

1.0 Features

* Display: 128 Dots X 64 Dots; * Driver Mode: 1/64 Duty, 1/9 Bias;
* Display Mode: Reflective / transflective / transmissive type optional; Positive; Normal / wide Temp. Optional;
* Assembly: COB * Backlight: EL Optional;

2.0 Extern Dimensions

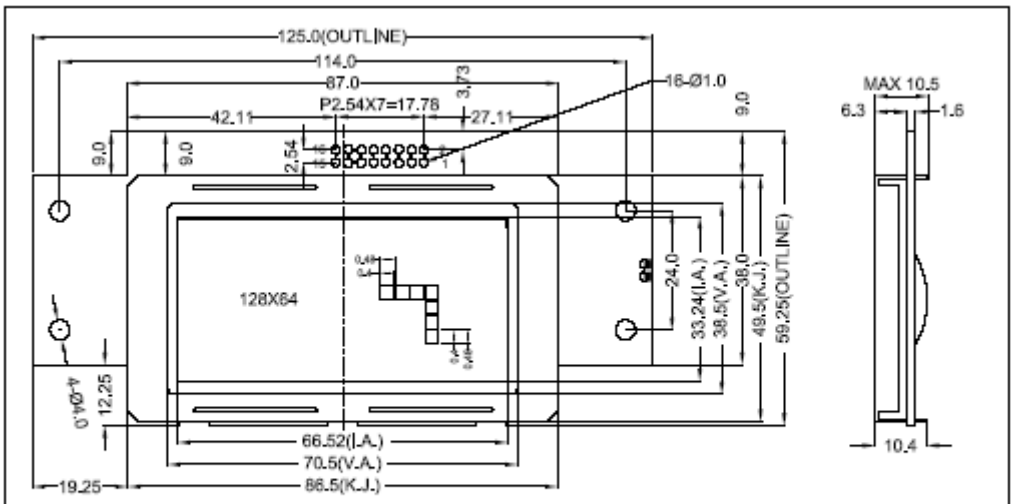

PIN#	1	2	3	4	5	6	7	8
SYM	GND	VCC	RS	E	$\overline{RST}$	R/W	D0	D1
PIN#	9	10	11	12	13	14	15	16
SYM	D2	D3	D4	D5	D6	D7	CS1	CS2
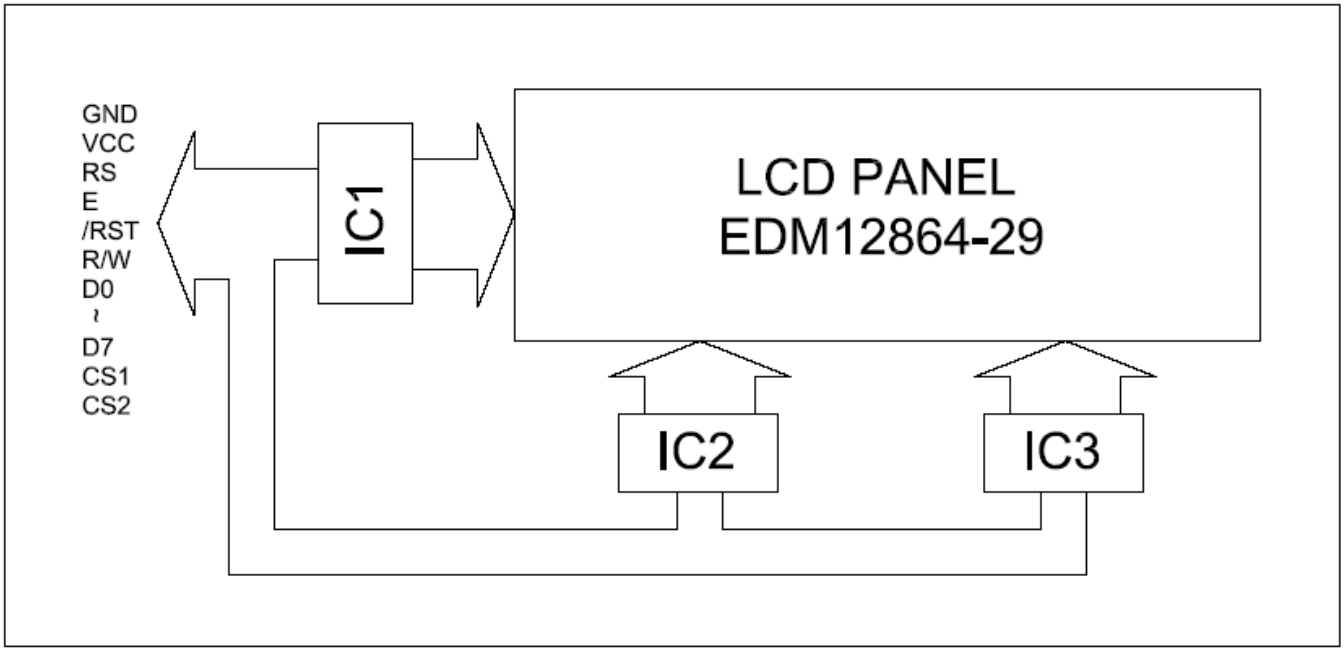
3.0 Logic Diagram